www.welchcomer.com

WELCH-COMER

208-664-9382
877-815-5672 (toll free)
208-664-5946 (fax)

350 E. Kathleen Avenue
Coeur d'Alene, ID 83815

WATER SYSTEM EVALUATION

FOR

CARLIN BAY PROPERTY OWNERS ASSOCIATION

Prepared by Welch Comer & Assoc.

JUNE 2018

WELCH-COMER
ENGINEERS | SURVEYORS

WATER SYSTEM EVALUATION

PROJECT NO.41276

SUBMITTED TO THE:

CARLIN BAY PROPERTY OWNERS ASSOCIATION

PROFESSIONAL ENGINEER
LICENSED
8276
6/29/18
STATE OF IDAHO
STEVEN B CORDES

JUNE 2018

PREPARED BY:

WELCH-COMER
ENGINEERS | SURVEYORS

350 E. Kathleen Avenue

Coeur d'Alene, ID 83815

208-664-9382 ♦ 208-664-5946 Fax

E-Mail: wc@welchcomer.com

APPENDIX

A. Idaho Department of Building Safety Policy on Submersible Well Pumps in Bodies of Water

B. Memcor Membrane Filtration Units

C. Roberts Filter Rapid Sand Filtration Units

D. EPA Filter Backwash Recycling Rule

E. AES Quote for Wireless Reservoir Telemetry

F. Cost Estimates-Provided by CBPOA Water System Operator

G. Map of Lake Bottom

H. Pictures of Existing Reservoirs

Introduction:

The purpose of this report is to evaluate the key components of the Carlin Bay water system, identify needs, develop options, and recommend improvements.

System Demands:

Current Demands:

Based on 2016-2017 flow data, the water system is producing an average of 16,322 gallons per day (gpd) for the 61 active connections. This equates to 268 gpd per connection. The peak day production was 40,000 gallons in 2016 and 42,500 gallons in 2017. This equates to approximately 700 gallons produced per connection on the peak day. This is actually quite a bit less than some other water systems in the area.

Over the same period, an average of 14,250 gpd was sold based on meter readings. This leaves approximately 14% as lost or unaccounted-for water. Potential sources of lost water can include meter inaccuracy, unmetered irrigation water, fire hydrant flushing, construction water, leaks, and line breaks. A loss rate of 14% is fairly typical for municipal water systems.

Future Demands:

Assuming a future buildout of 180 connections and that demand patterns stay the same, the system would need to be capable of producing 48,240 gallons on an average day and 126,000 gallons on a peak day.

Recommendations:

The new filtration system must be capable of meeting current peak day demands with one of the filters out of service. Also, the system should be sized to accommodate some growth with the new filters and be designed to allow expansion as the system demands increase in the future. Given the large number of vacant lots and the relatively slow growth rate of the system, it's probably not cost effective to size the new filters to immediately be able to accommodate total buildout demands.

Current peak day flows are approximately 700 gpd per connection. If two 50 gpm filter trains were installed in parallel, they would normally be able to produce a combined 100 gpm. Assuming they run no more than 21 hours per day on a peak day, this would give a capacity of 126,000 gpd. This equates to 180 connections. However, you must assume that one of the filters is out of service on a peak day. So, the production would be 63,000 gpd or 90 connections.

In the future, a third filter train could be installed so production capacity would be 126,000 gpd with one of the filters out of service.

For comparison purposes, equipment quotes have been obtained for 50 gpm rapid sand and membrane packaged plants. The Association could, of course, opt to install larger or smaller capacity filters initially.

Intake Pumps:

DEQ/COE Rules:

Placing submersible pumps in lakes has been a common practice for decades. In recent years, the Corps of Engineers and IDEQ have questioned the safety and legality of utilizing well pumps in open water. Well pumps are commonly utilized in lake applications but they are typically not UL listed for open water installations. The outcome of this issue will not likely be known for several years, but one possible outcome is that submersible lake pumps could not be replaced once they fail. A policy memo from the Idaho Division of Building Safety is included in Appendix A.

Existing Pump/Intake:

The existing intake system consists of two 15 horsepower submersible well pumps installed in the lake. The intake is a vertical piece of slotted PVC pipe located approximately under the marina dock. The intake pumps are the original pumps installed when the filtration system was installed in 1974. They produce 100 gpm each and do not appear to have any significant issues. However, given their age, it is likely time to start thinking about replacing them. We would recommend that two new pumps be installed, each able to at least meet the peak filtration rate of the filter plant at full buildout.

Extend Intake:

The water under the marina is relatively shallow, especially when the lake is at low winter level. This has resulted in high raw water turbidity during runoff events. Extending the intake line into deeper water would help. It would also reduce the chance of algae or other organic materials entering the water system. It would also help reduce the possibility of contamination resulting from spills or discharges at the marina. The existing intake structure could be relocated into deeper water by adding more pipe. An Idaho Dept. of Lands encroachment permit would be needed.

Shore based option:

Given the uncertainty of the future of submersible pumps in the lake and the cost associated with having to hire divers to work on them, we would recommend that the Association consider a shore based option when it comes time to replace the intake pumps. One way this could be done would be to install a wetwell at the water's edge. A pump structure would then be constructed over this wetwell. This would allow the pump motors to be above lake level and serviceable without the need for divers. This

system is currently utilized by the City of Priest River for their water treatment facility. (include pictures of Priest River)

Treatment Options:

Current system:

The current system consists of pressure filters that filter the raw lake water. Chlorine is added to the filtered water and it is then pumped up into the distribution system. The filters periodically backwash. This backwash water is captured in a small pond below the water treatment plant and pumped into the wastewater system where it is stored in the lagoons and ultimately land applied.

Options Considered:

Options considered for replacement of the existing filter included:

- Pressure Filters
- Open Bay Rapid Sand Filters
- Slow Sand Filters
- Membrane Filters

Rapid Sand:

Open bay rapid sand filters are commonly utilized for small systems as a packaged plant. Raw water typically has a coagulant added and then passes through a clarifier prior to moving through the primary filter. The primary filter typically consists of several layers of media that may include garnet and anthracite.

These filters are typically very capable of treating high turbidity source water and may be automated, so they are relatively easy to operate. They must backwash periodically, and typically 5-10% of the water produced is lost to backwash.

These filters have a relatively high loading rate and therefore do not require as much room as other treatment technologies. One of the advantages of this type of filter is that they filter bays are open for visual observation and inspection. This can make them easier to troubleshoot that other filter designs.

The primary disadvantage of this type of filtration is that it is a mechanical system with several moving parts. They do require maintenance and operators with a good understanding of the systems.

There are several systems utilizing this type of plant in North Idaho and Eastern Washington. We have obtained an equipment quote in the amount of $330,000 for two

50 gpm packaged filtration systems. This is included in Appendix F. This quote is just for the filters for comparison purposes. The total project cost would need to include a building, piping, electrical, controls, engineering, and potentially property acquisition costs. A conservative budgetary number for planning purposes would be $900,000-$1.3M for a total project cost for a new water treatment plant. This equates to approximately $5,000-$7,000 per connection for 180 connections.

Membrane:

Membrane filtration can produce a very high level of treatment. Water is forced through microscopic openings in a membrane, removing impurities. The cost for this technology is coming down as more membrane plants are produced. However, they are still relatively expensive. A quote in the amount of $390,000 for two 50 gpm packaged membrane filters is included in Appendix B. The membranes also must be periodically replaced, and this can be a significant cost. It is likely that IDEQ would require a substantial pilot testing of this technology prior to approving it for Carlin. Also, this is just the cost for the membrane filters for comparison purposes and does not include the building improvements, property costs, piping, electrical or controls.

Slow Sand:

Slow sand Filtration is a very old and proven technology. It is actually a biological treatment technique. The sand provides an environment for small organisms that utilize bacteria and other impurities in the raw water as a food source. This top layer of sand is known as the “schmutzedeck”. As the filter becomes plugged, the top layer of sand must periodically be scraped off and removed. There are several slow sand filters in operation using lake Coeur d’Alene as a raw water source. These include Gozzer Ranch, Syringa Heights, and Harbor View Estates. They work well and are very simple to operate.

The loading rate for a slow sand filter is very low, thus the name “slow sand”. This allows time for the biological action to take place. This results in a relatively large surface area being required for the water treatment plant. With a maximum loading rate of 0.1 gallons per minute per square foot of filter area, a 50 gpm filter bay would be approximately 500 square feet. A minimum of two filter bays would be required with provisions to add a third. A slow sand filter will typically be much larger than a rapid sand filter for a given flow rate. Therefore, they require more real estate and are more expensive to construct. They also require a very specific sand media. There used to be a relatively inexpensive source of this sand from the garnet mine near Clarkia. However, this source is no longer available and suitable sand can be hard to locate.

A slow sand filter would not lend itself to the existing water treatment plant site due to its size and the topography of the site. It would need to be sited either on a residential

lot closer to the lake or on the Association property. Slow sand filters are typically more expensive to construct than rapid sand filters due to their size and required land area. However, they are generally less expensive to operate once constructed. This option was not pursued further but could be at the direction of the Association.

Pressure Filter:

Pressure filters, similar to what is in place now were considered and would be a viable option. They are particularly suited to situations where pressure is to be maintained through the filtration process. However, at the current location, the filtered water is not under pressure and must be pumped back into the system. Therefore, the benefits of an open bay filter make it a better choice. Price quotes for pressure filters were not obtained but can be if desired.

Backwash Water:

Quantity:

With most treatment systems, assume that 5-10% of the water produced will be rejected as backwash water. In 2016-2017, an average of 988,500 gallons per year of reject water was sent to the backwash pond and ultimately to the sewer system. At a sewer production rate of 200 gpd/ per residential connection, this equates to just over 13 equivalent connections. This is a little over 16% of the total water produced. There are three ways that this water can be handled:

Filter Recycle:

It is possible to send the backwash water to a settling basin and then blend it back into the raw water feed for reprocessing. There are rules that regulate how this can be done. The benefit of this option is that the backwash water is no longer being discharged. There would also be a small power savings since the backwash water would no longer be pumped up to the wastewater treatment ponds. An EPA summary of the filter backwash recycling rule is included in Appendix D.

NPDES Discharge:

There is a general permit that allows backwash water from water treatment plants to be discharged into surface waters such as the lake. However, this permit does come with monitoring and reporting requirements as well as limitation on constituents such as total suspended solids. These limitations would most likely require that the backwash water be allowed to settle in the backwash pond prior to the clear water being discharged. A conveyance system to get the backwash water back to the lake would also be required.

Sewer system:

Eliminating backwash water from sewer system would be a positive thing. The backwash water from the water treatment plant requires a significant portion of the available wastewater storage pond volume each year.

WTP Siting Options:

Three options were considered for siting the new water treatment facility

- Current Site
- Association property
- A residential lot near the lake

Current site:

The current site has several benefits:

- Already owned by the Association
- Already has piping in place
- Already has clearwell and pumping station
- Already has backwash pond

The downside to the existing site is that it would be very difficult to keep the existing filtration system in service while constructing a new treatment facility on the same lot. It would be much more feasible to purchase additional property, construct the new facility on the new property, and then decommission the existing filters.

Association Property:

Another option would be to construct the new facility on property owned by the Association. The obvious benefit is that there would be no land acquisition cost. The drawbacks are that a dedicated raw water feed line would have to be constructed from the existing treatment facility up to the new site. Setbacks would also have to be maintained from the wastewater treatment and irrigation facilities. The water treatment facility would need to maintain required separation distances from the wastewater treatment ponds and spray irrigation area. This would greatly limit the possible locations.

Residential Lot:

A third option would be to purchase a residential lot closer to the lake.

The benefits of this would be:

- Makes backwash discharge to lake potentially more feasible.
- Lower horsepower lake intake pumps could be utilized.
- Raw water line already in place.
- Relatively flat site could be acquired.

The drawbacks are:

- Cost.
- Aesthetics of having a treatment facility in a residential neighborhood.
- A new clearwell and booster station would be required.

Distribution System Improvements:

The distribution system generally appears to be in good shape. The system operator has identified several recommended improvements. These are included in Appendix F along with his estimates of cost.

Most of these proposed improvements involve replacing existing older lines with C-900 PVC pipe.

One of the suggested improvements includes replacement of the 2500 feet of 4” line connecting the lake pumps.

Another recommended improvement would be to install pressure reducing valve (PRV) stations that would allow water to automatically flow down from a higher datum to a lower datum when needed. We understand that water can now be transferred between pressure zones but must be done so manually. PRV stations would allow reservoirs to more easily be taken off line for maintenance and would allow storage from upper reservoirs to automatically flow down through the system to provide fire flow if needed. A PRV station could be installed between each of the pressure zones. The estimated purchase cost for each PRV station is approximately $17,000. The installed cost would be more on the order of $25,000. Two would be required. An additional PRV station could be added if Reservoir #3 is constructed.

Telemetry/Controls:

There is an existing SCADA/Control system located at the water treatment plant that allows the lake pumps, water treatment plant, booster pumps, and reservoirs to communicate. There is a hard wire that connects Reservoir 2 to the system. This hard wire system is susceptible to damage. The operator had obtained a proposal in 2012 from AES to provide a wireless communication system to Reservoir 2, included in Appendix E. This system would require that power be extended to reservoir 2.

A wireless link to Reservoir 2 would provide more reliable communication and control.

When a new water treatment facility is constructed, it can be integrated into the existing control system.

Standby Power/Storage:

In order for the system to be able to continue to produce and pump water during a power outage, the system would have dedicated generators or at least transfer switches and portable generators in place to power the lake pumps, filters, boosters, and control system.

Alternatively, having a significant volume of standby storage at the new Reservoir 3 would be another way of ensuring that water is available during extended power outages. Pressure reducing valve (PRV) stations could be installed to allow the water to move down into the lower pressure zones as needed without over pressurizing the system.

Reservoirs/Boosters:

Existing Reservoirs:

The clearwell of the water treatment plant pumps up to Reservoir 1. Booster pumps at Reservoir 1 then transfer water up to Reservoir 2. Each pressure zone is served by its corresponding reservoir. Water can be moved down from a higher zone to a lower, but it is a slow manual process.

Reservoir 2 has provisions for booster pumps to pump to a future Reservoir 3, but these pumps have not been installed and there is not currently power to Reservoir 2.

The existing reservoir/boosters are generally in good condition. They had experienced leakage in the past, but this has been addressed by the operators. The reservoirs will continue to need periodic maintenance though.

Reservoir 3:

The addition of an upper reservoir would provide several benefits to the system. It would provide more consistent flow and pressure to the higher elevation services. It would provide more standby and fire storage for the entire system. It would also allow lots on the upper ridge to be connected to the water system if a booster station is installed at the new reservoir.

Piping would need to be installed from Reservoir 2 to Reservoir 3, along with power and telemetry. Provisions exist at Reservoir 2 for booster pumps. Power would need to be brought to Reservoir 2 and the pumps installed to pump the water to Reservoir 3.

A concrete or steel ground level storage reservoir would typically be on the order of $2.50 -$3.50 per gallon to construct depending on size and configuration. The recommended size would depend on the intended use. This would range from 30,000 gallons if reservoir was just going to be used for equalization and standby storage up to 120,000 gallons if the Association desired to have 1,000 gpm of fire flow for 2 hours available.

Funding/Financing:

Several options exist to fund whatever improvements the Association decides to implement.

The first would be to pay as you go and fund improvements through rates.

Another option would be to seek loan funding through IDEQ or USDA Rural Development. It is probably not likely that any significant portion of the funding will come through grants. Either IDEQ or USDA would require that the funded improvements fall within an approved water facilities plan. The terms of the loans usually have low interest rates and payback periods of 20-30 years.

IDEQ has a planning grant program that will fund half of the cost of preparing a facility plan if awarded. We would recommend that CBPOA submit a planning grant application for the next funding cycle. The grants are awarded after the applications are ranked each year. The competition for the grant funding varies each year depending on the applications received.

Summary:

Our preliminary recommendation is that the Association consider planning for the following improvements:

- Apply for a DEQ planning grant

- Begin the planning to construct a new water treatment plant on the existing site utilizing two packaged rapid sand filters with provisions for a third.
- Extend the intake for the lake pumps to deeper water.
- Replace the lake pumps with a shore based pumping system.
- Add PRV stations to allow water to flow back to lower zones.
- Replace older segments of pipes as funding allows.

If the addition of a third reservoir is something the Association wishes to pursue, the new reservoir and the associated improvements necessary could be a standalone project or incorporated into a larger comprehensive project.

APPENDIX A:

IDAHO DEPARTMENT OF BUILDING SAFETY POLICY ON SUBMERSIBLE WELL PUMPS IN BODIES OF WATER

WELCH-COMER
ENGINEERS | SURVEYORS

State of Idaho
DIVISION OF BUILDING SAFETY

Building a Safer Idaho

C.L. "BUTCH" OTTER
Governor
C. Kelly Pearce
Administrator

1090 East Watertower Street
Suite 150
Meridian, Idaho 83642
Main # 1-800-955-3044
Fax # 1-877-810-2840
dbs.idaho.gov

Issue: Use of Submersible Well Pumps in Bodies of Water

Background:

Recently, the Division of Building Safety (DBS) became aware of the fact that the submersible well pumps being installed in bodies of water are not listed by the pump manufacturers for that application. For many years, these pumps have been routinely utilized to provide both domestic water and irrigation for properties bordering lakes and rivers, primarily in north Idaho.

Baseline requirements for utilization of electrical equipment in Idaho:

1. Title 54 chapter 10 §54-1001, Idaho Code states:

"From and after the taking effect of this act, all installations in the state of Idaho of wires and equipment to convey electric current and installations of apparatus to be operated by such current, except as hereinafter provided, shall be made substantially in accord with the National Electrical Code". Idaho has currently adopted the 2014 edition of the National Electrical Code.

2. Article 110.3 of the 2014 National Electrical Code relating to the examination, identification, installation, and use of equipment stipulates:

"(A) Examination. In judging equipment, considerations such as the following shall be evaluated:

(1) Suitability for installation and use in conformity with the provisions of this *Code*

Informational Note: Suitability of equipment use may be identified by a description marked on or provided with a product to identify the suitability of the product for a specific purpose, environment, or application. Special conditions of use or other limitations and other pertinent information may be marked on the equipment, included in the product instructions, or included in the appropriate listing and labeling information. Suitability of equipment may be evidenced by listing or labeling.

(B) Installation and Use. Listed or labeled equipment shall be installed and used in accordance with any instructions included in the listing or labeling."

Certification and approval of electrical products and materials:

All electrical materials, devices, etc. are required to be approved for the use intended. IDAPA 07.01.10 § 011 states the following:

011. CERTIFICATION AND APPROVAL OF ELECTRICAL PRODUCTS AND MATERIALS.

In the state of Idaho, all materials, devices, fittings, equipment, apparatus, luminaires, and appliances installed or to be used in installations that are supplied with electric energy shall be approved as provided in one (1) of the following methods:

01. Testing Laboratory. Be tested, examined, and certified (Listed) by a Nationally Recognized Testing Laboratory (NRTL). (3-20-14)

02. Field Evaluation. Non-listed electrical equipment may be approved for use through a field evaluation process performed in accordance with recognized practices and procedures such as those contained in the 2012 edition of NFPA 791 - Recommended Practice and Procedures for Unlabeled Electrical Equipment Evaluation published by the National Fire Protection Association (NFPA).

Conclusion:

Submersible Well pumps are listed (approved) for specific purposes. Per Underwriters Laboratories, submersible well pumps approved under UL 778 have not been evaluated for use in bodies of water where swimming, boating, and other recreational activities take place. Therefore, the listing of submersible well pumps under UL778 does not suffice to allow the Idaho Division of Building Safety to approve these types of pumps for applications other than those addressed in the listing of the equipment in question. Further, UL approvals are contingent on any listed equipment being utilized in conformance with the manufacturer's instructions for installation and use.

The Division of Building Safety has been searching for another accepted standard that would apply to submersible well pumps being utilized in a body of water, but has been unable to identify such a standard. The Division encourages interested parties to bring forward any information relative to an applicable standard and pumps that have been tested and listed for utilization in the circumstances discussed in this paper.

Employing an approved field evaluation testing agency to conduct a field evaluation of the pump for utilization in the proposed application is not a viable option unless/until a proper standard can be identified to facilitate the review process.

Other pumping equipment can be utilized in conformance within the listing parameters of alternative pumps to safely provide domestic and irrigation water to lakeside properties.

Policy:

As a result of this investigation process the Division of Building Safety is adopting the following policy.

1. Submersible Well pumps are not listed for use in swimming or marine areas, and such an application of the submersible pump typically conflicts with the manufacturer's installation and usage instructions. Therefore, The Division of Building Safety cannot approve the installation of submersible well pumps and associated wiring in bodies of water where swimming, boating, and other activities take place that could place the public in danger.

2. When existing submersible well pumps located in bodies of water where swimming, boating, and other activities take place that could place the public in danger are replaced, any replacement pumps must be approved for the application and be installed in conformance with the manufacturer's installation instructions.

3. Installations of approved equipment, installed in accordance with labeling, listing and manufacturer's instructions, used to withdraw water from bodies of water will be approved in accordance with Idaho Division of Building Safety's standard permitting and inspection procedures, in accord with adopted rules, statutes and the National Electrical Code as adopted by the State of Idaho.

If you have any questions or concerns, please let me know.

Warren Wing

Electrical Program Manager
State of Idaho Division of Building Safety
1090 E. Watertower St, Ste 150
Meridian, Idaho 83642
Office (208) 332-7147

Warren.wing@dbs.idaho.gov

APPENDIX B:
MEMCOR MEMBRANE FILTRATION UNITS

WELCH-COMER
ENGINEERS | SURVEYORS

MEMCOR® XP^SR
Specification Sheet

MEMCOR® XP^SR
Low Pressure Membrane Filtration Units

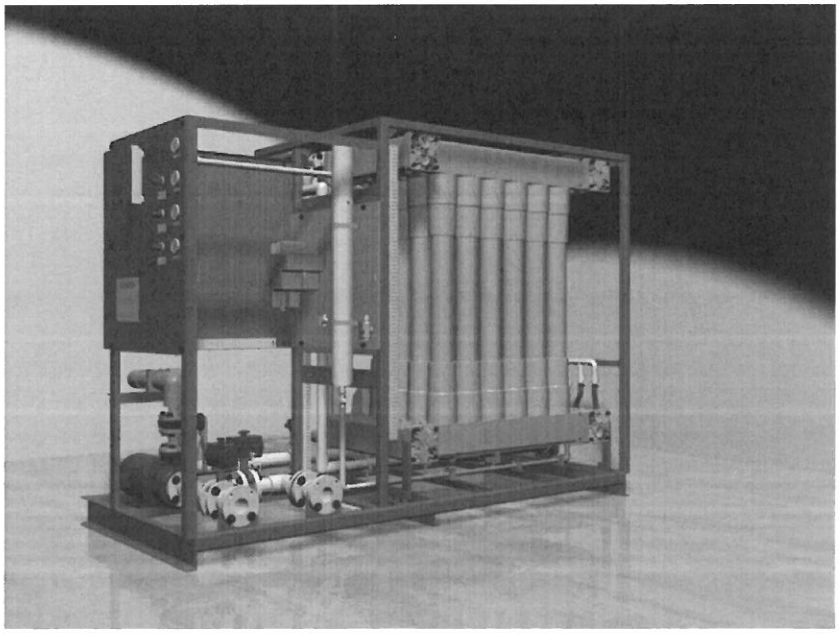

The MEMCOR® XP^SR is a pre-engineered pressurized membrane filtration system that utilizes advanced membrane technology for a multitude of water treatment applications.

The factory assembled and tested package comes delivered to site with:

- Skid mounted UF unit with integral process pump, membranes, valves, piping and instrumentation for pressure, temperature, flow and filtrate turbidity on skid
- CIP Tank with heater and instrumentation (loose ship)
- Chemical transfer for CIP (loose ship)
- Compressed Air System for backwash, integrity testing and valve control (loose ship)
- Pre-screen unit (loose ship)
- Process critical interconnecting valves (loose ship)

With their building-block approach, MEMCOR XP^SR Units minimize design, installation and start-up time while providing reliable, high quality water in a compact footprint.

Note: Design, data and dimensions are subject to modification without notice.

MEMCOR® XP^SR
Specification Sheet

PVdF Hollow Fibre Ultrafiltration Membrane Module

The heart of the MEMCOR® XP^SR is the L10 membrane module (shown left) consisting of many thousands of tubular hollow fibers. The L10 module weighs approximately 14 lb. (6.5 kg), and is 3.8 ft (1157mm) tall, making it easy to handle. The parameters of the L10 membrane modules are noted in the following table:

Parameter	Details
Operating Mode	Outside-In, Pressurized UF
Typical Applications	Surface, Ground, Secondary Effluent, Tertiary Effluent, Seawater Filtration
Nominal Pore Size	0.04 µm
Membrane Material	PVdF
Module Length	45.5 in / 1157 mm
Module Diameter	4.7 in / 119 mm
Module weight	14 lbs / 6.5 kg

The module and module housing are separate components. This design feature results in lower cost of membrane module replacement and less waste generation during a membrane change out.

The membrane is made from PVDF (Polyvinylidene Fluoride), which offers the following advantages:

- Homogeneous membrane (no risk of delaminating).
- Chlorine resistant to allow for removal of organic foulants.
- Greater mechanical strength than polysulfone membranes and therefore not damaged by vigorous air scour used during backwash.

The fibers within the module are arranged vertically to minimize less stress on the membrane.

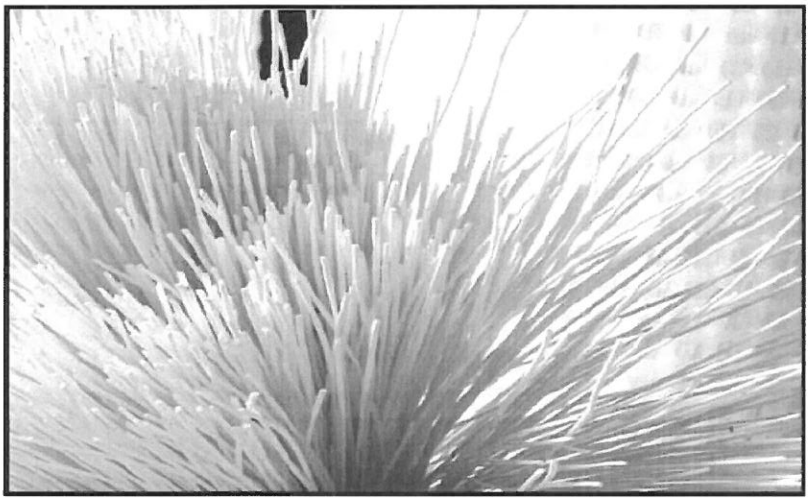

Simple, Efficient Installation

MEMCOR® XP^SR units are fast, simple and safe to install. Enhanced system design shown below results in a very cost effective UF system:

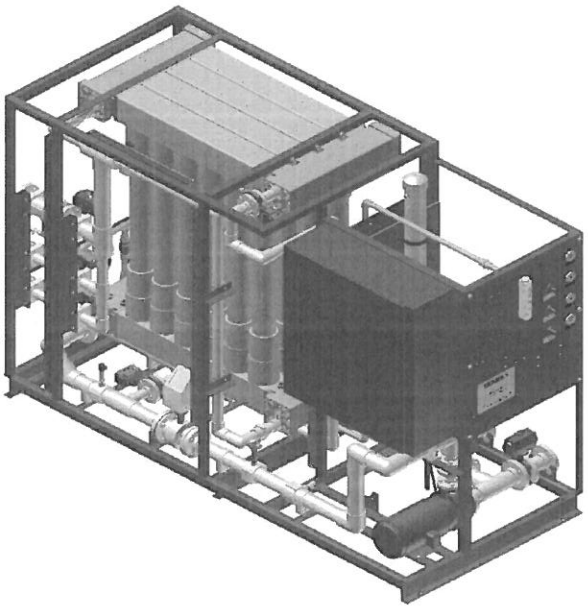

XP^SR systems are factory assembled, not 'erector-set' type membrane systems providing these advantages

- XP^SR systems are not 'erector-set' type membrane systems.
- Individual modules do not have to be installed at site. Modules can be pre-installed into a self supporting array. The arrays are sealed to preserve the modules, which results in less installation risk to the owner.
- Factory assembly and testing minimizes start-up time, reducing site work, site movements and improving site safety.

Note: It is recommended that MEMCOR XP^SR Low Pressure Membrane Filtration Units are installed in an area protected from freezing, under cover with protection from direct sunlight and weather.

MEMCOR® XP^SR
Specification Sheet

Expanded Control Options Maximize Value

The XP^SR design allows for easy integration into an existing water plant. Evoqua offers two options for the control features, the Plus and Deluxe offering. The Plus control option allows for a standalone UF skid which integrates only the UF critical process signals. The Plus control option comes with one control panel on the unit which houses the PLC, VFD, and HMI, which integrates the critical UF subsystems control (like CIP). The figure below illustrates how the Plus control panel ties into the plant. The Plus option is ideal for one skid UF systems. The Plus option does not allow for control of ancillary devices which are not critical to the operation of the Evoqua supplied UF. Any signals not shown below will require integration into the main plant control scheme by the installing contractor.

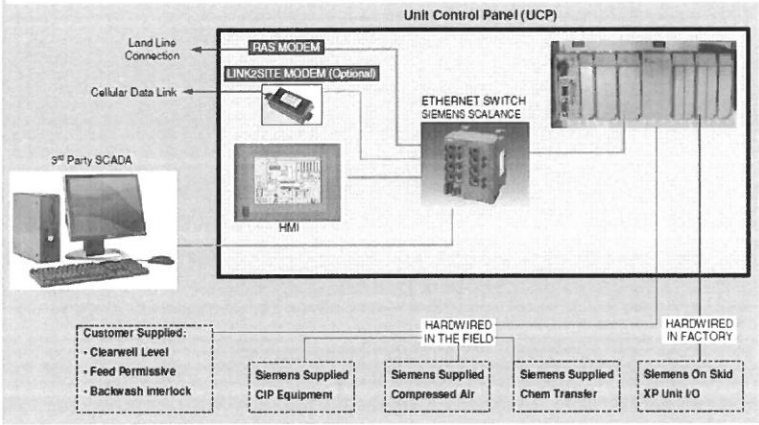

The Deluxe option provides a wall mounted Process Control Panel (PCP) separate from the UF skids. Each UF skid is equipment with an on board power distribution and I/O panel. Within the skid panel the unit I/O, VFD, and skid power distribution equipment is contained. Each skid and each ancillary subsystem then networks back to the PCP. The Deluxe option comes with a level of system expandability and allows for a greater level of plant integration than the Plus option. The Deluxe option is well suited for two and three skid systems, the figure below presents the networking interface of the PCP. Review any project specific requirements with Evoqua prior to procurement.

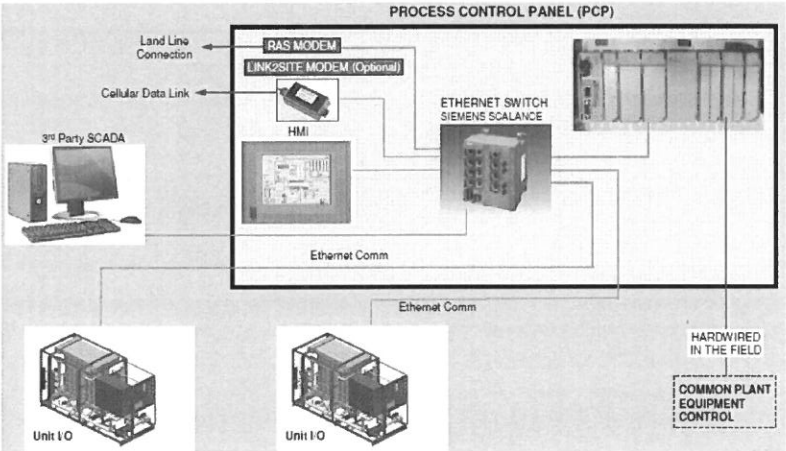

Typical Operations

Feed water enters the unit directly by means of a feed pump or from a pressurised source after passing through a 250 - 500 micron strainer. MEMCOR® XP^SR systems use L10V membrane modules, each containing thousands of hollow fiber PVDF membranes surrounded by a protective plastic mesh. Each module is contained in a "center tube" or module housing and can be isolated from the rest of the system using integral isolation valves. Filtrate is collected from the top and bottom of the modules.

An intermittent backwash helps to minimize membrane fouling. The backwash is a physical process that uses a low-pressure air scour and air-assisted liquid backwash to remove accumulated particles from the surface of the membrane hollow fibres. A major advantage of the MEMCOR XP^SR system is that no filtrate backwash pumps are required. This reduces the mechanical installation costs and the total installed power requirements.

The backwash cycle lasts approximately 4 minutes and occurs at an interval of 18 to 60 minutes, depending on feed water characteristics. A backwash can either be initiated after a pre-set period of time or when the change in resistance to flow exceeds a pre-set limit.

To ensure long term stable performance, the MEMCOR XP^SR includes the ability to perform chemical maintenance washes (MW) and clean-in-place (CIP) cycles. The CIP is initiated based either on transmembrane pressure (TMP) or time. CIP's are performed using acid or chlorine (sodium hypochlorite) based solutions. Each CIP sequence is generally two to three hours in duration (including rinsing time). The MW sequence is similar to that of the CIP although is shorter and uses a lower chemical concentration.

The typical acid CIP is 1 – 2% (by weight) citric acid solution, which may be heated to 86 Deg F (30 Deg C) when required. The typical chlorine solution is 500 – 600 mg/L and may require heating to 68 Deg F (20 Deg C) in situations where water temperature is very low. Maintenance wash solutions are not heated and typically use a 100 – 200 mg/L chlorine solution. In some instances an acid maintenance wash may be used with phosphoric, hydrochloric, or sulphuric acid in a 0.05 – 0.25% by weight solution depending on the application.

Note: Modifications can be made to the MEMCOR XP^SR Unit for use on sea water or other high TDS applications. Please consult Evoqua Water Technologies for further details.

Example Feed & Production Conditions

The MEMCOR® XP^SR system is designed to treat a variety of feed waters including surface water, groundwater, clarified water and secondary wastewater. The unit capacities stated below are based on the following water quality:

Feed Conditions		
Water Type	Turbidity (NTU)	Suspended Solids (mg/L)
Clarified Water	< 1	0.1
Groundwater	0.1	0.1
Secondary Wastewater	1 – 10	1 – 50
Surface Water	1 – 100	1 – 100

XP^SR Production				
Water Type	Unit of Measure	XP^SR Unit Capacity Range (XP3 – XP24)	Typical Flux Range[1]	Unit of Measure
Clarified Water	Gallons/Day	20,000 – 245,000	35 – 50	gfd
	Liters/Day	76,000 – 927,000	59 – 85	lmh
Groundwater	Gallons/Day	22,000 – 295,000	40 – 60	gfd
	Liters/Day	83,000 – 1,110,000	68 – 102	lmh
Secondary Wastewater	Gallons/Day	10,000 – 146,000	20 – 30	gfd
	Liters/Day	38,000 – 553,000	34 – 51	lmh
Surface Water	Gallons/Day	14,000 – 220,000	25 – 45	gfd
	Liters/Day	53,000 – 833,000	42 – 77	lmh

1 – Flux Ranges are Based on a water temperature of 20°C

Note: Capacities and flux rates listed above are for reference only and are not a guarantee of performance. Contact Evoqua Water Technologies for specific capacity and flux based on raw water characteristics.

MEMCOR® XP^{SR}
Specification Sheet

Unit Dimension Details

The MEMCOR® XP^{SR} Low Pressure Membrane Filtration Units are compact, allowing for optimal use of space:

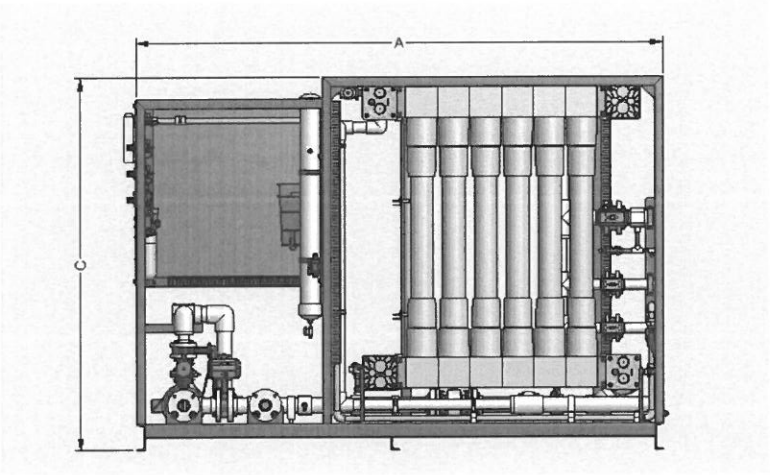

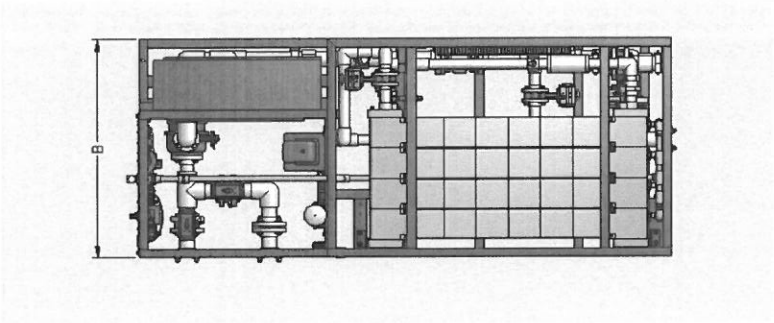

Unit Model	Dimension 'A'	Dimension 'B'	Dimension 'C'
XP^{SR} 3 – 12	7' – 2 1/2"	4' – 3 1/8"	8' – 5 3/4"
XP^{SR} 18-24	10' – 3 3/4"	4' – 5 1/8"	7' – 2 3/4"

NOTE: Figure above is XP^{SR}24

MEMCOR® XP^{SR}
Specification Sheet

Termination Point Details

The MEMCOR® XP^{SR} System termination points are detailed as follows:

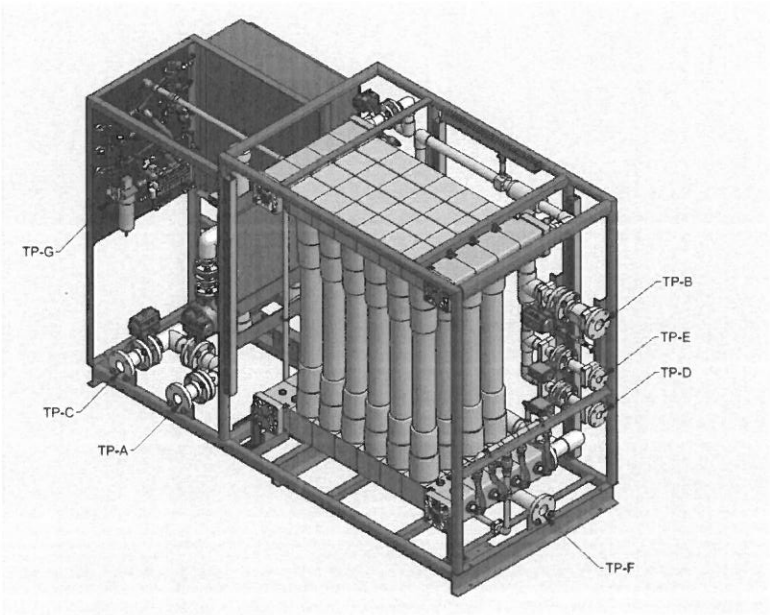

Termination Point (Connection Type)	Model 3/12 (in/mm)	Model 18/24 (in/mm)
TP-A (Flange)	2" / 50	3" / 75
TP-B (Flange)	2" / 50	3" / 75
TP-C (Flange)	2" / 50	3" / 75
TP-D (Flange)	1 ½" / 40	2" / 50
TP-E (Flange)	1 ½" / 40	2" / 50
TP-F (Flange)	2" / 50	3" / 75
TP-G (FNPT)	¾" / 20	1" / 25

NOTE: Figure above is XP^{SR}24

Standard Equipment & Service Supply

The MEMCOR® XP^SR Low Pressure Membrane Filtration Unit forms the core component of a membrane filtration system. Ancillary equipment external to the Unit is required to complete the system. Ancillary equipment requirements vary from site to site, but usually include the following:

Standard System Equipment Supplied:

Feed System (P&ID #920077001-FD-01)

- Basket strainer for feed system (250 – 500 micron)

System Interconnection (P&ID #920077002-FD-01) – Interconnecting Piping by Others

Memcor XP^MR Unit(s) (P&ID #920077008-FD-02)

- Siemens Sitrans Process Instrumentation
- Bray double-acting pneumatic valves, with DI, nylon coated disc
- Hach 1720E or FilterTrak 660 Filtrate Turbidimeter
- Plus or Deluxe Control
- Variable Frequency Drive

CIP System (P&ID #920077003-FD-01)

- HDPE Tank with heating element and instrumentation, corporation stops for chemical injection and process valves

Chemical Transfer (P&ID #920077004-FD-01)

- CIP chemical transfer equipment (citric acid, mineral acid & chlorine).

Compressed Air System (P&ID #920077005-FD-01)

- Rotary screw type air compressor with integral 60-gallon receiver tank and standalone air receiver (if required).

Standard Support & Service:

- Dedicated Project Manager & Support Staff
- Ancillary system I/O & integration (Evoqua Supplied Equipment Only)
- Standard Engineering & Product Documentation Submittal
- System Commissioning by Evoqua Field Service Engineers

Note: Items with 'EWT' label in the P&ID's will be supplied by Evoqua Water Technologies.

Available Options

Various equipment options are available from Evoqua Water Technologies, at additional cost, and if required should be requested at the time of ordering.

Number of Modules Fitted

The MEMCOR® XP^{SR} Membrane Filtration Unit can be fitted with 3, 6, 9, 12, 18 or 24 L10 modules

Self-Cleaning Strainers

Evoqua Water Technologies can provide self cleaning strainers upon request.

Common Feed Turbidimeter

Hach 1720E Turbidimeter

Combined Filtrate Turbidimeter

Hach 1720 E or FilterTrak 660 Laser Turbidimeter

Pressurized/Gravity Feed

The XP^{SR} provides the flexibility to allow for gravity feed through the system when site specifics allow. For available feed pressures above 35 psi – 50 psi (205 – 345 kPa) at TP-A, the XP^{SR} uses an electro-pneumatic flow control valve to control flow through the unit.

Double Block & Bleed Valve Kits

Double Block & Bleed Valve Kits are available for cross-connection control to meet local regulations where applicable.

CIP Waste Diversion Valves

A set of valves for each can be supplied to divert the CIP and MW waste streams to a different location than the backwash waste if required.

CIP Waste Neutralization

Evoqua can provide a skid mounted CIP neutralization system, which neutralizes the acid and chlorine solutions prior to discharge. The neutralization skid is easily integrated into the overall Evoqua supplied control system and contains chemical feed for the neutralization agents.

Redundant Air Compressor

Evoqua offers a redundant air compressor to allow for a 2 x 100% design as a standard option.

Special Tools Supplied as Standard

Evoqua Water Technologies recommends that the special tools required for maintenance are available at each site. This optional equipment includes the:

- Module Filtrate Isolation Valve Tool;
- Module Test Vessel Assembly and Nylon Repair Pins;
- Sonic Analyser to identify areas of suspect integrity during a Sonic Test;
- C-Spanner, strap wrench and other tools required for manual L10 Module removal and replacement. Please consult Evoqua for details of all maintenance equipment options.

Items Supplied by Others

- Feed and filtrate storage
- Backwash waste collection and disposal system
- Membrane preservative disposal, if applicable
- CIP chemical supply and concentrate storage
- CIP waste collection and disposal (neutralization) system
- Civil works and building modifications or construction to house the MEMCOR XP^SR equipment including all concrete work
- Pipe supports, interconnecting pipework/valves to/from the XP^SR Unit(s) and associated systems
- Pneumatic lines supplying air to off skid pneumatic actuators
- Floor drains
- Safety showers
- Platforms or equipment for maintenance
- Power supply
- Supply and installation of MCC's and disconnects
- Supply and installation of off skid control wiring and power cabling
- Switchgear for ancillary equipment
- Off skid pump alignment and vibration analysis
- Lubricants
- Unloading, unpacking, storage, installation, assembly, and field installation of the XP^SR system
- Supervision of installation
- Permits and approvals
- Anchor bolts and anchor bolt calculations
- Grouting
- Other site specific requirements, including laboratory analysis of feed and filtrate.

Project Name:	Carlin Bay Water
Revision:	0
Issue Date:	Feb 1, 2018

DESIGN BASIS		
	VALUE	UNIT
Design Capacity	72,000	gpd
Buildout Capacity	144,000	gpd
Product Line	XPsr	
Module type	L10N	
Total Design Number of Unitl(s)	2	
Total Buildout Number of Unit(s)	2	
Number of modules per Unit	12	
Maximum number of modules per Unit	24	
Design Condition	Avg Conditions	
Unit Operation	N	
Allow Cycle Rotation Operation?	no	
Additional avg. time in N-1 operation per day	-	min
Additional avg. time in N-2 operation per day	-	min
Turndown Ratio per Unit	50%	
Operation pattern	100%	%
Other downtime	0%	%
Bio-Fouling Potential	Low	
Minimum Design Temp Condition	Guaranteed	
Minimum Design temperature	7.0	degC

FLOW CALCULATIONS - DESIGN	
	DESIGN
Avg Daily Net Filtrate Flow	72,819
Avg Daily Gross Feed Flow	78,411
Avg Inst. Flow per Unit	30.2
	DESIGN
Avg Inst. Flow per Module	2.5
Avg Inst. flux	**15.95**
Gross Avg flux	13.36
Net Avg flux	13.21
Avg inst. Flux corrected to 20degC	22.73
Recovery	91.82%

CLEANING PARAMETERS		
	VALUE	UNIT
Backwash Interval	30	minutes

AHT enabled?	yes	
AHT interval	24	hours
CIP Interval	30	days
CIP Regimes	2	#
CIP Tank Storage Capacity	1.1	volumes
Acid MW enabled?	yes	
Acid MW Interval	48	hours
Chlorine MW enabled?	yes	
Chlorine MW interval	24	hours

By adding the additional 12 membrane modules per skid for the future buildout, the 2 x XPsr 24 system filtrate capacity would be 100 gpm

FLOW CALCULATIONS - DESIGN		
Avg Daily Net Filtrate Flow	145,097	gpd
Avg Daily Gross Feed Flow	156,281	gpd
Avg Inst. Flow per Unit	60.2	gpm
Avg Inst. Flow per Module	2.5	gpm
Avg Inst. flux	**15.89**	gfd
Gross Avg flux	13.31	gfd
Net Avg flux	13.21	gfd
Avg inst. Flux corrected to 20degC	22.65	gfd
Recovery	92.14%	%

Cory, let me know if you need any additonal information at this early stage of conceptual design

Regards,

John Q

Steve Cordes

From: Steve Cordes
Sent: Thursday, February 15, 2018 8:20 AM
To: 'Cory Firzlaff'
Subject: RE: Memcor UF skids - budget scope for the Carlin Bay Water opportunity

Hi,

I don't think I got pricing info on this

From: Cory Firzlaff [mailto:cory@tcsalesco.com]
Sent: Friday, February 02, 2018 9:06 AM
To: Steve Cordes <scordes@welchcomer.com>
Subject: Fwd: Memcor UF skids - budget scope for the Carlin Bay Water opportunity

Steve, I've got some personal things going on so I'm forwarding you the Carlin Memcor information from my cell phone. I'll get back in the office late this afternoon and will look this over to see if there's anything else I need to send. Thanks

Initially, we could offer two MEMCOR XP small range skids for the Carlin Bay Water opportunity

These pre engineered UF skids are designed to have between 12-24 membrane modules per skid

Each XPsr skid would have only 12 L10N membrane modules installed initially, which would easily provide the 50 gpm of filtrate flow (~72,000 gpd)

For the future build out, they would only need to add the additional 12 modules per skid, which would bring the filtrate flow to 100 gpm (144,000 gpd)

The rough budget price for this 2 x XPsr 12 (expandable to 24 modules) would be ~$390,000

Here is a snapshot of the MEMCOR 2 x XPsr12 (24) L10N initial system sizing:

APPENDIX C:

ROBERTS FILTER RAPID SAND FILTRATION UNITS

WELCH-COMER
ENGINEERS | SURVEYORS

Roberts Water Technologies, Inc. *A Unit of the Roberts Filter Group*

PROVIDING SPECIALIZED PRODUCTS TO THE WATER AND WASTEWATER TREATMENT INDUSTRIES

214 North Jackson Street
Media, PA 19063
www.robertsfiltergroup.com
610-583-3131
fax 610-583-0117

February 08, 2018

Welch Comer Engineers
Office: 208.664.9382

Attention: Steven Cordes
PE | Vice President, Principal Engineer

Reference: Carlin Bay, ID

Subject: Roberts' Budget Proposal BP –RO18-0208-T

Dear Steven:

We are pleased to present Roberts' budget proposal for furnishing two (2) PACER II® water treatment units for the Carlin Bay, ID Treatment Plant as follows. Installation of all equipment and materials proposed shall be by others. The project proposed consists of TWO PACKAGE PACER II® MODEL P-50P WATER TREATMENT UNITS (IN PAINTED STEEL) WITH NOTED ACCESSORIES FOR A TOTAL PLANT PRODUCTION RATE OF 50 GPM WITH ON UNIT ON STANBY.

Scope of Work

1. Two (2) Roberts' Package PACER II® Model P-50P tanks with CONTACLARIFIER® factory assembled internals and media plus filter internals including PVC header/lateral filter underdrain and AIR GRID® air scour system and media. Tank construction shall be of ¼" carbon steel finished with NSF-61epoxy paint internally and externally except for tank bottom which is bare. Production rate of each unit is 50 GPM with the clarifier and the filter operating at a rate of 10 GPM/SF and 5 GPM/SF respectively. Please see attached sales drawing S153-1 for dimensions, tank and operating weight.

The following items are mounted on each of the plants (except as noted).

1. One (1) Influent flow loop consisting of a flow meter and modulating BFV.
2. One (1) Lot electrically operated wafer butterfly valves.
3. One (1) Mechanical float valve for effluent filter rate control.
4. One (1) Effluent flow indicator.
5. One (1) Lot Clarifier and Filter head switch assemblies with gauges.
6. One (1) Lot Filter level switch assemblies for control and alarm functions.
7. One (1) Close Coupled 316 SS Centrifugal Effluent Pump w/ TEFC motor (1 HP).
8. One (1) Close Coupled 316 SS Centrifugal Backwash Pump w/ TEFC motor (Unit 1 only) (3 HP).
9. One (1) Regenerative Turbine Blower set up with alarm switch (Unit 1 only) (3 HP).
10. One (1) Lot PVC inter connecting piping for unit mounted items.
11. One (1) Lot Effluent turbidimeter w/ sample solenoid.
12. One (1) NEMA 12 Control Panel (PLC based with Coagulant Controller & Operator Interface) (Unit 1 only).
13. One (1) NEMA 12 Terminal box & Motor Starter (Unit 2 only).
14. One (1) NEMA 12 Load Center (Unit 1 only).
15. Three (3) NEMA 12 Motor Starters (Unit 1 only).
16. One (1) Lot Conduit and wiring for unit mounted items.

Items not mounted on the plants

17. One (1) Lot Raw Water turbidimeter w/ sample solenoid.
18. One (1) 2" PVC inline static mixer.
19. Two (2) Chemical feed systems each with pump, calibration unit, mixer & drum.
20. One (1) Hypochlorite feed system with pump, calibration unit and mtg. shelf (for use with customer supplied drum for feeding 10-12% solution).
21. One (1) Lot Freight to job site.
22. One (1) Lot Normal startup and operator training services.

Items not included:

Concrete work, slab coating to put under the unit, raw water or other pumps, motor starters (except for those listed above), catwalk systems, interconnecting piping or wiring of any items not mounted on the plant, chemical bulk storage or transfer equipment or installation labor.

Budget Pricing:

Price for Both Units with noted accessories: $330,000

We thank you for the opportunity of submitting our budget proposal to you for your consideration. If you should have any questions please feel free to contact me.

Sincerely Yours,
ROBERTS WATER TECHNOLOGIES, INC.

Mr. Ryan Odell
Regional Sales Manager

Attachment

RO:gdr

CC: Andrew Klempel/ Correct Equipment
File

Steve Cordes

From: Cory Firzlaff <cory@tcsalesco.com>
Sent: Friday, February 16, 2018 5:25 AM
To: Steve Cordes
Subject: Re: Memcor UF skids - budget scope for the Carlin Bay Water opportunity

From: Steve Cordes <scordes@welchcomer.com>**Date:** Thursday, February 15, 2018 at 9:20 AM
To: Cory Firzlaff <cory@tcsalesco.com>**Subject:** RE: Memcor UF skids - budget scope for the Carlin Bay Water opportunity

Hi, I don't think I got pricing info on this

From: Cory Firzlaff [mailto:cory@tcsalesco.com] **Sent:** Friday, February 02, 2018 9:06 AM
To: Steve Cordes <scordes@welchcomer.com>**Subject:** Fwd: Memcor UF skids - budget scope for the Carlin Bay Water opportunity

Steve, I've got some personal things going on so I'm forwarding you the Carlin Memcor information from my cell phone. I'll get back in the office late this afternoon and will look this over to see if there's anything else I need to send. Thanks

Initially, we could offer two MEMCOR XP small range skids for the Carlin Bay Water opportunity.These pre engineered UF skids are designed to have between 12-24 membrane modules per skid.Each XPsr skid would have only 12 L10N membrane modules installed initially, which would easily provide the 50 gpm of filtrate flow (~72,000 gpd).For the future build out, they would only need to add the additional 12 modules per skid, which would bring the filtrate flow to 100 gpm (144,000 gpd)

The rough budget price for this 2 x XPsr 12 (expandable to 24 modules) would be ~$390,000

Here is a snapshot of the MEMCOR 2 x XPsr12 (24) L10N initial system sizing:

Project Name:	Carlin Bay Water
Revision:	0
Issue Date:	Feb 1, 2018

DESIGN BASIS		
	VALUE	UNIT
Design Capacity	72,000	gpd
Buildout Capacity	144,000	gpd
Product Line	XPsr	
Module type	L10N	
Total Design Number of Unitl(s)	2	
Total Buildout Number of Unit(s)	2	
Number of modules per Unit	12	
Maximum number of modules per Unit	24	
Design Condition	Avg Conditions	
Unit Operation	N	
Allow Cycle Rotation Operation?	no	
Additional avg. time in N-1 operation per day	-	min
Additional avg. time in N-2 operation per day	-	min
Turndown Ratio per Unit	50%	
Operation pattern	100%	%

Other downtime	0%	%
Bio-Fouling Potential	Low	
Minimum Design Temp Condition	Guaranteed	
Minimum Design temperature	7.0	degC

FLOW CALCULATIONS - DESIGN	
	DESIGN
Avg Daily Net Filtrate Flow	72,819
Avg Daily Gross Feed Flow	78,411
Avg Inst. Flow per Unit	30.2
	DESIGN
Avg Inst. Flow per Module	2.5
Avg Inst. flux	**15.95**
Gross Avg flux	13.36
Net Avg flux	13.21
Avg inst. Flux corrected to 20degC	22.73
Recovery	91.82%

CLEANING PARAMETERS		
	VALUE	UNIT
Backwash Interval	30	minutes
AHT enabled?	yes	
AHT interval	24	hours
CIP Interval	30	days
CIP Regimes	2	#
CIP Tank Storage Capacity	1.1	volumes
Acid MW enabled?	yes	
Acid MW Interval	48	hours
Chlorine MW enabled?	yes	
Chlorine MW interval	24	hours

By adding the additional 12 membrane modules per skid for the future buildout, the 2 x XPsr 24 system filtrate capacity would be 100 gpm

FLOW CALCULATIONS - DESIGN

Avg Daily Net Filtrate Flow	145,097	gpd
Avg Daily Gross Feed Flow	156,281	gpd
Avg Inst. Flow per Unit	60.2	gpm
Avg Inst. Flow per Module	2.5	gpm
Avg Inst. flux	**15.89**	gfd
Gross Avg flux	13.31	gfd
Net Avg flux	13.21	gfd
Avg inst. Flux corrected to 20degC	22.65	gfd
Recovery	92.14%	%

Cory, let me know if you need any additonal information at this early stage of conceptual design

Regards,

John Q

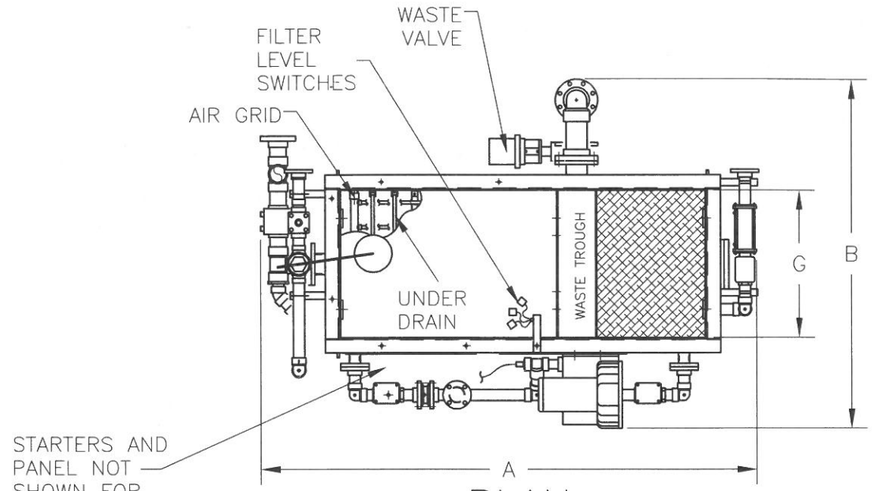

PLAN

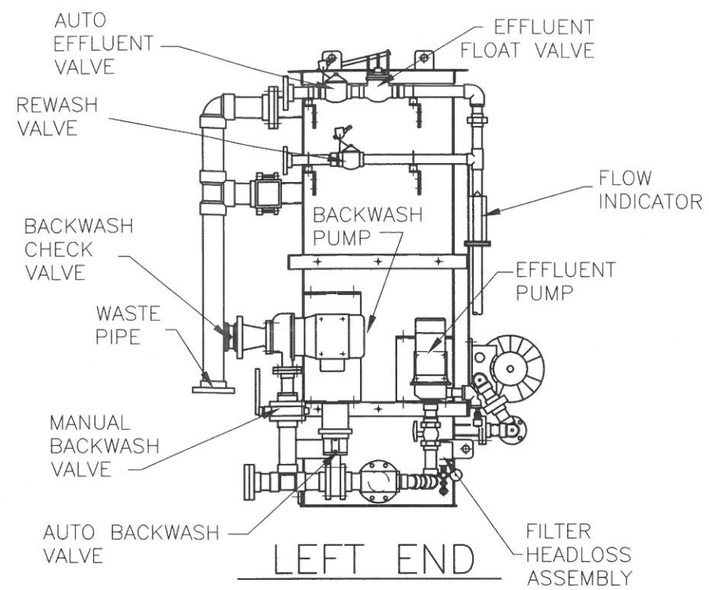

LEFT END

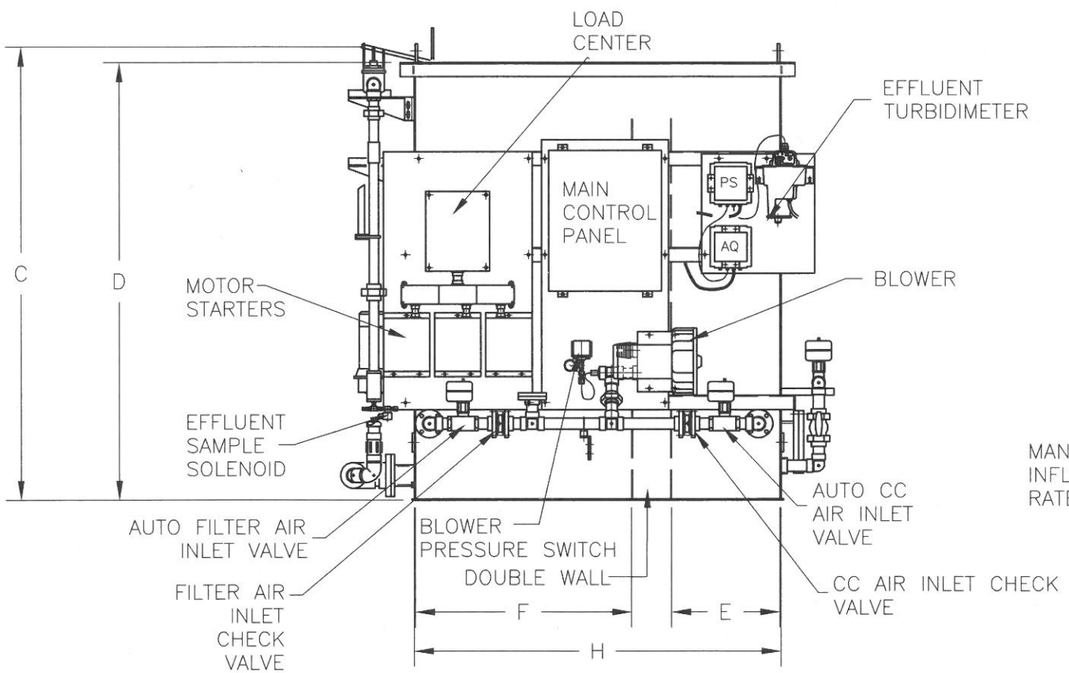

ELEVATION

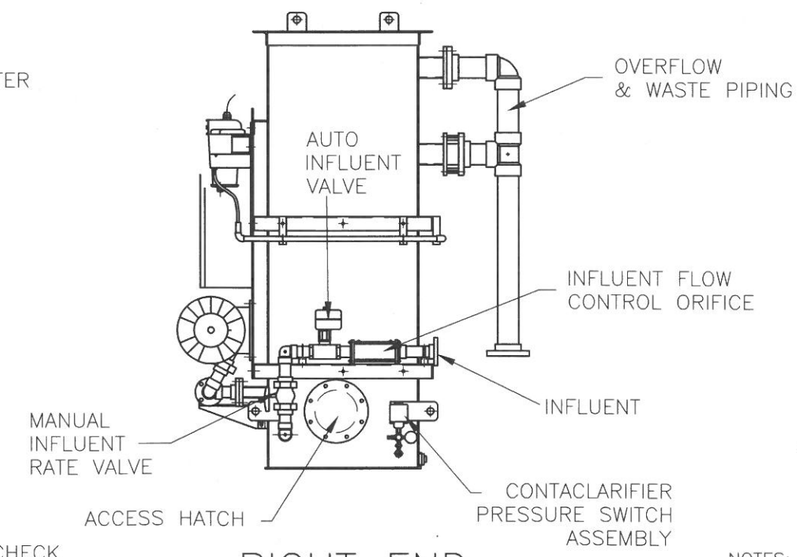

RIGHT END

NOTES:
1) INFORMATION PROVIDED IS OF A GENERAL NATURE. CONSULT ROBERTS SALES REP FOR DETAILED INFORMATION FOR DESIGN PURPOSES.

MODEL	DESIGN CAPACITY GPM (MGD)	TANK WEIGHT (LBS.)		PIPE CONNECTION SIZE					DIMENSIONS							
		SHIPPING	OPERATIONAL	INFLUENT	EFFLUENT	BACKWASH	WASTE	REWASH	LENGTH A	WIDTH B	HEIGHT C	D	E	F	G	H
50P	50 (.07)	3,800	13,750	2"	2"	4"	4"	1 1/2"	9'-0"	6'-3"	8'-8"	7'-9"	1'-11"	3'-10"	2'-8"	6'-6"

DIMENSIONS TO NEAREST INCH

NO.	REVISION	DATE	BY

DRAWN	DATE	CHECKED	DATE
TAH	7/21/00	CO	7/21/00

ROBERTS WATER TECHNOLOGIES, INC.
DARBY PENNSYLVANIA 19023

PACKAGE PACER II® P-50P
TYPICAL GENERAL ARRANGEMENT

SCALE 1:32 (REF)
CONTRACT STANDARD
SECTION STD
DWG NO. S153-1

APPENDIX D:

EPA FILTER BACKWASH RECYCLING RULE

WELCH-COMER
ENGINEERS | SURVEYORS

United States
Environmental Protection
Agency

Filter Backwash Recycling Rule:
A Rule Summary for Systems

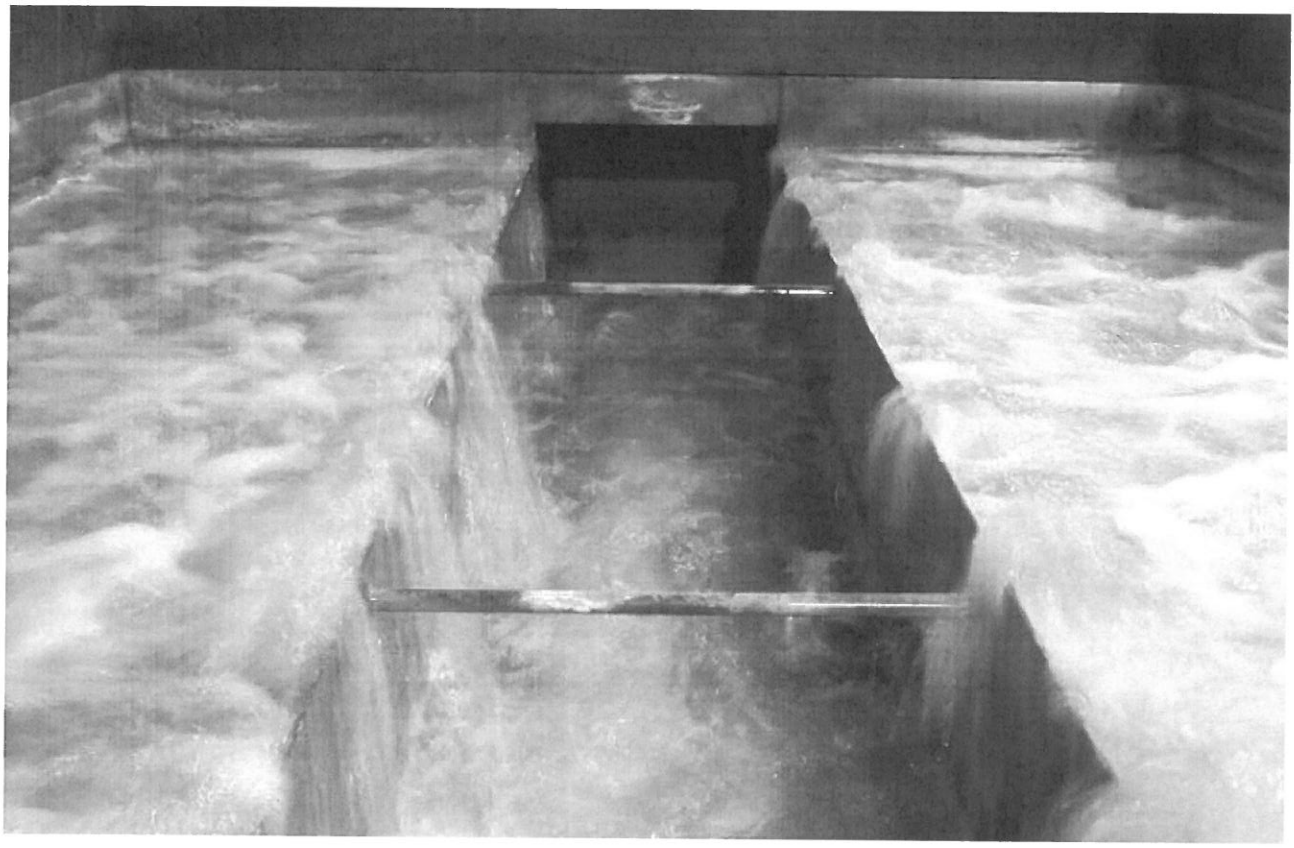

Office of Water (4606M)
EPA 816-R-02-013
www.epa.gov/safewater
August 2002

This document does not substitute for EPA regulation nor is this document regulation itself. Thus, it cannot impose legally-binding requirements on EPA, States, or the regulated community, and may not apply to a particular situation based upon the circumstances.

Printed on Recycled Paper

Filter Backwash Recycling Rule: A Rule Summary for Systems

BACKGROUND

What is the purpose of the rule?

The Filter Backwash Recycling Rule (FBRR) is intended to reduce the opportunity for recycle practices to adversely affect the performance of drinking water treatment plants and to help prevent microbes, such as *Cryptosporidium,* from passing through treatment systems and into finished drinking water. Customers may become ill if they drink such contaminated water.

Spent filter backwash water, thickener supernatant, and liquids from dewatering processes can contain microbial contaminants, often in very high concentrations. Recycling these streams can reintroduce microbes and other contaminants to the treatment system. Additionally, large volumes of recycle streams may upset treatment processes, allowing contaminants to pass through the system. To minimize these risks, the FBRR requires that recycle streams pass through all the processes of a system's existing conventional or direct filtration system (as defined in 40 CFR 141.2) that the Environmental Protection Agency (EPA) has recognized as capable of achieving 2-log (99 percent) *Cryptosporidium* removal. The FBRR also allows recycle streams to be reintroduced at an alternate location, if the location is State-approved.

What is *Cryptosporidium*?

Cryptosporidium is an intestinal parasite that can be passed through a water treatment plant and into the drinking water supply. Infection can cause gastro-intestinal illness, lasting up to two weeks, and may even be life-threatening for people with weakened immune systems. Several outbreaks of cryptosporidiosis have been traced to *Cryptosporidium* in drinking water. The worst outbreak occurred in Milwaukee in 1993 when more than 400,000 people fell ill with flu-like symptoms. *Cryptosporidium* is difficult to treat (inactivate) because it is resistant to most disinfectants used by water treatment systems. Consequently, other treatment processes, such as sedimentation and filtration, must be effective in removing *Cryptosporidium* oocysts from raw water and recycle streams.

Which systems are affected by the FBRR?

(Rule reference: 40 CFR 141.76(a))

Public water systems that meet **all** of the following criteria are subject to the FBRR:

- The system is a Subpart H system, (i.e. uses surface water or ground water under the direct influence of surface water (GWUDI)).
- The system treats water using conventional or direct filtration. (See the box on page 2 for definitions of conventional and direct filtration.)
- The system recycles one or more of the following: spent filter backwash water, thickener supernatant, or liquids from dewatering processes.

Conventional Filtration

Conventional filtration treatment, as defined in 40 CFR 141.2, is a series of processes including coagulation, flocculation, sedimentation, and filtration resulting in substantial particulate removal. Conventional filtration is the most common type of filtration.

Direct Filtration

Direct filtration, as defined in 40 CFR 141.2, is a series of processes including coagulation and filtration, but excluding sedimentation, and resulting in substantial particulate removal. Typically, direct filtration can be used only with high-quality raw water that has low levels of turbidity and suspended solids.

What are the requirements of the FBRR?

The FBRR has three main components:

1. **Reporting.** The FBRR requires a system to notify the State in writing about its recycle practices if the system is a Subpart H system, practices conventional or direct filtration, and recycles one or more of the regulated recycle streams. More information on reporting is contained in Section 1 beginning on page 3.

2. **Recycle Return Location.** The FBRR requires regulated recycle streams to be returned through all processes of a system's existing conventional or direct filtration system, as defined in 40 CFR 141.2. However, a system may recycle at an alternate location if approved by the State. More information on recycle return location is provided in Section 2 beginning on page 4.

3. **Recordkeeping.** The FBRR includes recordkeeping requirements related to recycling procedures. These requirements are outlined in greater detail in Section 3 beginning on page 6.

Recycle and Regulated Recycle Flows

Recycle – The act of returning recycle streams to a plant's primary treatment process.

Recycle Flows – Any water, solid or semi-solid generated by a plant's treatment processes, operational processes, and residual treatment processes that is returned to the plant's primary treatment process. Also referred to as recycle streams.

Spent Filter Backwash Water – A stream containing particles that are dislodged from filter media when water is forced back through a filter (backwashed) to clean the filter. Spent filter backwash water contains particles including coagulants, metals, and microbes such as *Cryptosporidium.*

Thickener Supernatant – A stream containing the decant from a sedimentation basin, clarifier or other unit that is used to treat water, solids, or semi-solids from the primary treatment processes. The "clear water" that exits the units after particles have been allowed to settle out is thickener supernatant (or sludge thickener supernatant).

Liquids from Dewatering Processes – A stream containing liquids generated from a unit used to concentrate solids for disposal. Processes may consist of centrifuges, filter presses, belt presses, vacuum filters, monofills, or other sludge concentrating equipment. Such equipment may be used to dewater sludge from treatment units used in recycling processes or sludge from units found in the primary processes.

SECTION 1
REPORTING REQUIREMENTS

(Rule reference: 40 CFR 141.76(b))

What information must be submitted to the State?

Each system that uses conventional or direct filtration and recycles spent filter backwash water, thickener supernatant, or liquids from dewatering processes must provide the State with the following written information **by December 8, 2003**:

$ A plant schematic showing the origin of all flows which are recycled, how the flows are transported, and the location where the flows are reintroduced back into the treatment process;

$ Typical recycle flow, highest observed plant flow experienced in the previous year, and design flow for the treatment plant (all flows must be reported in gallons per minute); and

$ The State-approved operating capacity for the plant, if the State has made such a determination.

The submitted data will be evaluated by the State to determine whether the system's current recycle return location is acceptable or if the system must make modifications. A system that fails to submit this information to the State commits a monitoring/reporting violation, which requires Tier 3 public notification (see box below). Failure to notify the public within the appropriate time period is a public notification violation. Table 2 lists the information that must be submitted to the State.

Violations & Public Notification

EPA has assigned each violation and situation requiring public notice to one of three categories, or tiers, based on the risk of adverse health effects. After you learn of a violation or situation, public notice must be provided according to the following requirements:

$Tier 1 – requires public notice within 24 hours by broadcast media, hand delivery, posting, or another method to reach others.

$Tier 2 – requires public notification within 30 days by mail, hand delivery, or another method to reach others.

$Tier 3 – requires public notification within one year by mail, hand delivery, or another method to reach others.

SECTION 2
RECYCLE RETURN LOCATION

(Rule reference: 40 CFR 141.76(c))

Why is the point of return for recycle streams important?

Recycle streams must be introduced at a point in the treatment plant that incorporates all treatment processes of a conventional or direct filtration system to reduce the opportunity for recycle practices to adversely affect plant performance. An alternate location may also be approved by the State. The point of introduction should ensure effective mixing and thorough dispersion of the recycle stream with raw water prior to subsequent treatment. The continuous and steady introduction of recycle streams tends to have a much less negative impact on the water treatment process than the sporadic introduction of larger volume recycle streams that vary in quality and quantity.

How can a plant that currently does not return its recycle streams through all treatment processes comply with the FBRR?

A system whose recycle streams currently do not pass through all the direct or conventional treatment plant's unit processes has two options:

$ Begin the necessary capital improvements to move the recycle location. Any such capital improvements must be completed by June 8, 2006.

$ Request approval of an alternate recycle location. Any requests for alternate recycle locations must be approved by the State no later than June 8, 2004. If capital improvements are required to return recycle streams to a State- approved recycle location, all capital improvements must be completed by June 8, 2006.

What factors will the State consider in deciding whether to approve an alternate location?

Each State has the flexibility to determine the criteria and factors they will utilize in evaluating and approving alternate recycle locations. Examples of factors that a State may use to evaluate requests for alternate recycle locations include (but are not limited to):

$ Does the plant require recycle to an alternate recycle location to maintain optimal finished water quality?

$ Does the plant have unique treatment requirements or processes that require the return of recycle streams to an alternate location?

$ Is the plant in compliance with the turbidity limits established in the Interim Enhanced Surface Water Treatment Rule/Long Term 1 Enhanced Surface Water Treatment Rule?

- What impacts would the use of the alternate recycle location have on treatment processes and finished water quality?

What if a proposed or current alternate recycle location has not received State approval?

If a system returns recycle to a location which does not provide treatment by all conventional or direct filtration processes (as defined in 40 CFR 141.2) without State approval, it commits a treatment technique violation which requires Tier 2 public notification. (See the box on page 3 for a discussion of violation categories.) Failure to notify the public within the appropriate time frame will result in a public notification violation. A system has until June 8, 2004, to receive State approval of its alternate recycle location.

What if a system does not complete capital improvements within the specified time period?

If capital improvements are required to comply, a system must complete such improvements no later than June 8, 2006. A system that does not complete capital improvements by the required date commits a treatment technique violation, which requires Tier 2 public notification. Failure to notify the public within the appropriate time frame is a public notification violation.

Are funds (grants, loans, etc.) available for making capital improvements?

No special funds have been set aside for improvements to meet the FBRR. However, the Drinking Water State Revolving Loan Fund is available to assist in funding infrastructure upgrades that will ensure safe drinking water. More information about the Drinking Water State Revolving Loan Fund is available at www.epa.gov/safewater/dwsrf.html. Systems may also contact the Safe Drinking Water Hotline at 1-800-426-4791, or by e-mail at hotline-SDWA@epa.gov. EPA also provides funding to States that have primary enforcement responsibility for their drinking water programs through the Public Water Systems Supervision (PWSS) grants program. Other Federal funds may be available through the U.S. Department of Housing and Urban Development Community Development Block Grant Program and the Rural Utilities Service of the U.S. Department of Agriculture. Individual States may have other loan or grant programs that could provide additional funding for necessary capital improvements. Contact your State for more information regarding such programs.

TABLE I:
Recycle Return Location Compliance Schedule

If:	You Must:	By:
Capital improvements are necessary to relocate the point of recycle return . . .	complete all improvements . . .	June 8, 2006
You are planning to request State approval for use of an alternate location . . .	receive approval from the State . . .	June 8, 2004
You are planning to request State approval for use of an alternate location AND capital improvements are necessary . . .	receive approval from the State for alternate recycle return location . . .	June 8, 2004
	complete all improvements . . .	June 8, 2006
You already return flows through the processes of your existing conventional or direct filtration system . . . (No capital improvements are necessary and you are not seeking approval for an alternate location)	meet only the reporting and record-keeping requirements of the FBRR.	See the Reporting and Recordkeeping Checklist on page 8.

SECTION 3
RECORDKEEPING REQUIREMENTS

(Rule reference: 40 CFR 141.76(d))

What additional data must be collected and maintained?

In addition to the information submitted to the State, a system must collect and maintain the following data to comply with the FBRR.

- A copy of all information that is submitted to the State (see Section 1).
- A list of recycle streams and the frequency with which they are returned.
- Average and maximum backwash flow rates through the filters and the average and maximum durations of the filter backwash process, in minutes.
- Typical filter run length and a written summary of how filter run length is determined (headloss, turbidity, time, etc.).
- The type of treatment provided for the recycle stream **before** it re-enters the conventional or direct filtration process.
- If applicable, data about the physical dimensions of the equalization or treatment units, typical and maximum hydraulic loading rates, type of treatment chemicals used, average dose of chemicals, frequency of chemical addition, and frequency of solids removal.

This information must be collected by June 8, 2004. Systems are not required to submit this information unless requested to do so by the State. However, the information must be retained and made available at the treatment plant for State review during sanitary surveys, Comprehensive Performance Evaluations (CPEs), or other site visit activities. After the State reviews this information, a system may be required to modify its recycling practices. Failure to comply with the reporting requirements is a recordkeeping violation, which requires Tier 3 public notification. Failure to notify the public within the appropriate time frame is a public notification violation. Table 2 provides a list of information the system must collect and retain.

What are other sources of information on the FBRR and other drinking water treatment issues?

A number of documents can be found at www.epa.gov/safewater/filterbackwash.html.

- The Filter Backwash Recycling Rule – This document contains the preamble and regulatory language of the Filter Backwash Recycling Rule, as published in the Federal Register.

- The Filter Backwash Recycling Rule Technical Guidance Manual – This document provides greater detail on many of the topics mentioned in this document.

Copies of these documents may be ordered through EPA's Safe Drinking Water Hotline (1-800-426-4791), the National Service Center for Environmental Publications (1-800-490-9198), or the National Technical Information Service at (1-800-553-6847) or www.ntis.gov.

EPA's Safe Drinking Water Hotline (1-800-426-4791) can also provide general drinking water information. You may e-mail the Safe Drinking Water Hotline at hotline-SDWA@epa.gov. The EPA Office of Ground Water and Drinking Water web page is also a good source of general drinking water information (www.epa.gov/safewater).

Table 2:
Reporting and Recordkeeping Checklist

Information Qualifying Systems Must Submit to the State by December 8, 2003	
Plant Schematic	
Origin of recycle streams	
Recycle stream transport	
Point where recycle stream enters treatment train	
Typical recycle flow (in gpm)	
Highest observed plant flow (in gpm) for previous year	
Design flow for treatment plant (gpm)	
State-approved operating capacity	
Information Qualifying Systems Must Collect and Retain Onsite by June 8, 2004	
Copy of information submitted to the State	
List of recycle streams	
Frequency with which recycle streams are returned	
Average backwash flow rate	
Maximum backwash flow rate	
Average duration of filter backwash (in minutes)	
Maximum duration of filter backwash (in minutes)	
Typical filter run length (in minutes)	
How is run length determined (turbidity, time, head loss, other)	
Type of treatment provided for the recycle flow	
Dimensions of equalization unit(s) (if applicable)	
Dimensions of treatment unit(s) (if applicable)	
$ Typical/average hydraulic loading rates	
$ Maximum hydraulic loading rates	
$ Type of treatment chemicals used	
$ Average dose of chemicals	
$ Frequency of chemical use	
$ Frequency of solids removal	

APPENDIX E:
AES QUOTE FOR WIRELESS RESERVOIR TELEMETRY

WELCH-COMER
ENGINEERS | SURVEYORS

Automatic Electrical Systems, Inc.
P. O. BOX 256, 15129 HWY 41
RATHDRUM, ID 83858
PHONE: 208/687-0627, FAX: 208/687-2181
E-Mail: aesjcp@frontier.com

Date: November 9, 2012

CARLIN BAY PROPERTY OWNERS ASSOCIATION PROPOSAL 2012-11-09-01 RESERVOIR 2 WIRELESS COMMUNICATIONS WITH REPEATER RADIO

Thank you for the opportunity to present this proposal. As we have discussed, without the radio survey, it is impossible to provide you a hard cost number. The below cost represents what we believe is a good estimated cost to provide a wireless link between Reservoirs 1 & 2.

AES, Inc. proposes to install a radio mast at Reservoir 2. The mast is a three legged triangular units that is designed to withstand hurricane winds. A concrete base and appropriate concrete mast base would be installed near the reservoir. Its height will be approximately 30 feet. AES, Inc. reserves the right to adjust the height to assure good communications. A cut sheet describing the Tower Section has previously been sent. The masts would be secured with appropriate guying and anchoring. The appropriate antennas would be mounted on the masts using steel pipe. Lightning arrestors would be installed on the co-axial wiring that would connect the antennas with the radios using conduit. A NEMA4 control panel would be installed at Reservoir 2 which would read reservoir level and the two alarm floats.

Also at Reservoir 2, we would install the power panel with four circuit breakers for the electrical power. The power panel and control panel would be mounted according to current electrical requirements (NEC). Both panels will be mounted on a uni-strut structure that will be attached to the reservoir using stand-offs.

At Reservoir 1, the necessary equipment to communicate with Reservoir 2 would be installed and programmed. An antenna would be added to the current antenna pole. The PLC would be programmed to read Reservoir 2's level and alarm floats status. The Scada computer at the filtration plant would receive Reservoir 2's level and alarm floats at the same locations as it currently does. An additional alarm would be added: "Reservoir 2 communications failed".

A repeating radio would be added at the lift station located near the Parrish home. The radio would include an omni antenna, surge suppression and necessary electrical equipment to provide power to the radio. Carlin Bay Property Owners Association would have to provide electrical access at the lift station that AES, Inc. could utilize to power up the repeating radio panel.

Estimated Cost: **$20,100.00**

Because we have already done a Radio Survey, we can guarantee good communications between Reservoir 1 and Reservoir 2. This warrantee does not include the following; lightning damage, vandalism, fire or natural disasters.

AES, Inc. warrants all equipment and labor furnished by AES, Inc. for one year. AES, Inc. will also honor any additional warranties provided by the manufacturer of the equipment. Warrantees do not include the following; lightning damage, vandalism, fire or natural disasters.

Note: This proposal may be withdrawn by us if not accepted within 30 days of our proposal document date.

This proposal represents design and engineering efforts of AES, Inc. and may not be reproduced, loaned, copied or used for any purpose without the express written authorization of AES, Inc.

Acceptance of Proposal – By signing below and returning a copy to AES, Inc., the above or attached prices, specifications, and conditions are satisfactory and are hereby accepted. AES, Inc. is authorized to do the work as specified.

_____	_____
DATE	DATE
_____	_____
Larry W. Parker	Client's Agent

Required Before Avista Supplies Power To Reservoir #2

Carlin Bay must open an account with Avista- call (800) 227-9187

CBPOA should contact Sprute about easement for power line up to reservoir 2. Avista will send form for granting of easement to Sprute's

CBPOA must send $6,187.28 (payment in full) and sign contract with Avista before work can start

AES

AES will supply dimensions for antenna tower pad

Confirm that AES will install power pedestal under present proposal

Verkist

Need cost estimate from Jon on antenna pad at reservoir 2

APPENDIX F:

COST ESTIMATES – PROVIDED BY CBPOA WATER SYSTEM OPERATOR

WELCH-COMER
ENGINEERS | SURVEYORS

Water Line Upgrades By Priority 4/02/09

1. **Upper Edgewater Rd:** Replace 1735 feet of 4-inch Schedule 120 PVC water main from clear well to reservoir 1. Replace 350 feet of 4-inch Schedule 120 PVC pipe from reservoir 1 to valves located on Ridgeview Dr., Lot 2. Replace 80 feet of 4-inch PVC line from main on Edgewater Dr. to valve at entryway to Hatch Development. Piping from thrust blocks into clearwell is schedule 40, solvent joint. It is not planned to replace these lines due to cost of drilling larger holes into clear well and replacement of thrust blocks. - $62,000.00
   Completed 2008

2. **Lower Edgewater Rd:** Replace two 6-inch Schedule 40 PVC lines from clear well down Edgewater Road to valves located in Sunset Shores, Lot 8 (784 feet). One 6" main feeds water from lake pumps to Clearwell. The other 6" main delivers water from Clearwell. Piping from thrust blocks into clear well is schedule 40, solvent joint. It is not planned to replace these lines due to cost of drilling larger holes into clearwell and replacement of thrust blocks. - $65,000-$80,000. Includes cost of road repairs.

3. **Timberlane:** Replace 864 feet of 4 inch Schedule 120 PVC water main from valves located in Sunset Shores, Lot 30 (in front of Leon Lehmans house) down to Timberlane Rd. Replace 310 feet of 4 inch Schedule 120 PVC along Timberlane Road. - $33,624.00
   Cost of repairing 310 feet of road approximately $10,000.
   Total Cost $43,624.

4. **Ridgeview Drive:** Replace 770 feet of 4-inch Schedule 120 PVC water main from valve located on Ridgeview Drive, Lot 2 (Intersection of Edgewater & Ridgeview Dr.) to the valve located at Ridgeview Drive, Lot 7 (Dave Wolferts property line). - $22,051.00

5. **Lake Pump Supply:** Replace 2500 feet of 4-inch Schedule 120 main from lake pumps to lower Edgewater Rd main. Connects with Lower Edgewater supply line to clearwell. - $45,824.00
   Cost of crossing Highway 97 $?

6. **Intersection of Ridgeview & Ridgeview Loop to Pipe stuck in gnd.-**Replace 200 feet of schedule 120 main from broken C-900 pipe stuck in ground (end of line where C-900 was installed that runs past lagoon) to intersection of Ridgeview Rd & Ridgeview Loop. Need to measure distance, 200 feet is estimated.
   Cost $6,000
   Cost of crossing Ridgeview road $2,000

7. **Sunset Shore Rd to Nicolson property line**-Replace 400 feet PVC main from valves (located across from Aeschilman house) to Nicolson property line. Need to measure distance, 400 feet is estimated.

Cost $12,000
Cost of crossing Carlin Bay Road approximately $4,000

8. **Reservoir 3 to Valve on South Side of Carlin Bay Rd**.
   Replace x feet of PVC main from valve located adjacent to Carlin Bay Rd to Reservoir 3.
   Cost $
   Cost of crossing Carlin Bay Road approximately $4,000

Total Lines: $277,499

Note: Cost estimate is based on $28.64 per foot which is the per foot cost Verkist is charging for the Upper Edgewater Rd. main replacement.

APPENDIX G:
MAP OF LAKE BOTTOM

WELCH-COMER
ENGINEERS | SURVEYORS

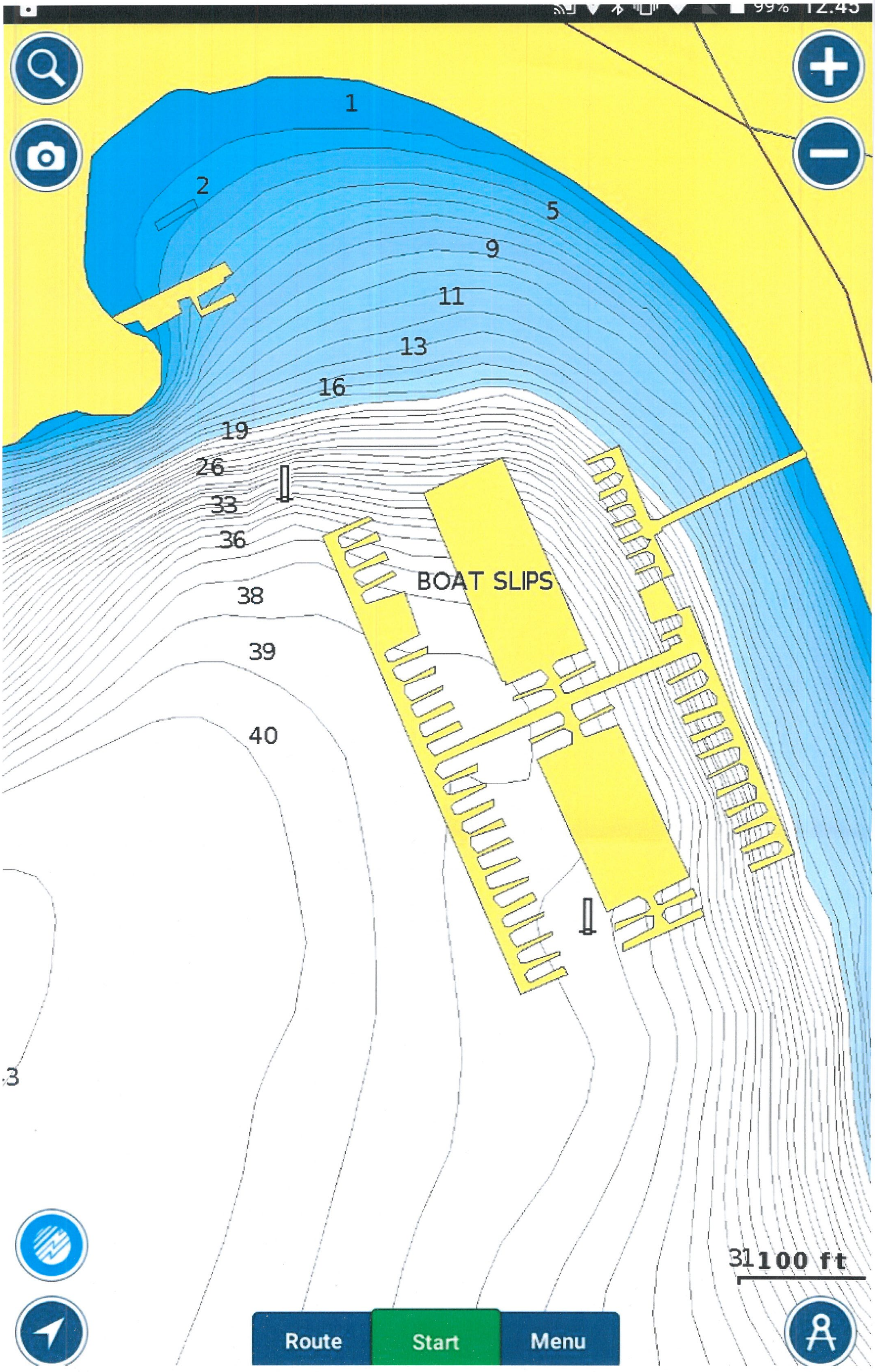
99% 12:43
1
2
5
9
11
13
16
19
26
33
36
38
39
40
BOAT SLIPS
3
1100 ft
Route
Start
Menu

APPENDIX H:

PICTURES OF EXISTING RESERVOIRS

WELCH-COMER
ENGINEERS | SURVEYORS